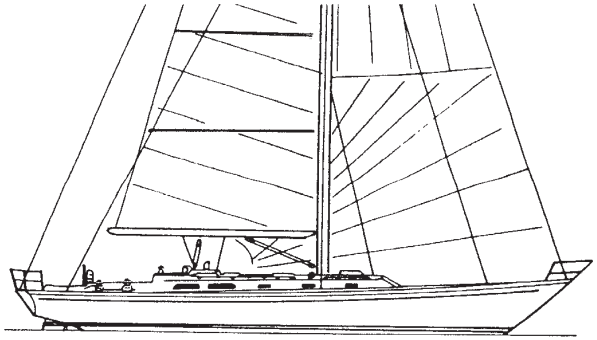

IBS Intelligent Battery System

the ultimate Battery System

RBM+
Relay Booster Module

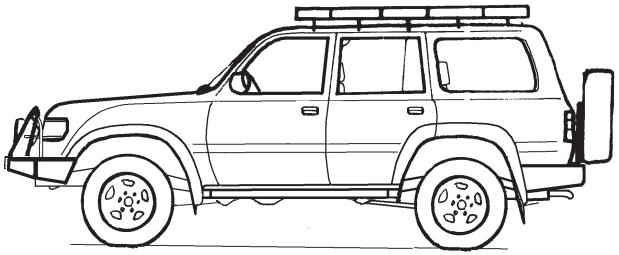

IBS-Dual Battery System 5 ans Jahre year Warranty

Installation

RBM+ Print Modul

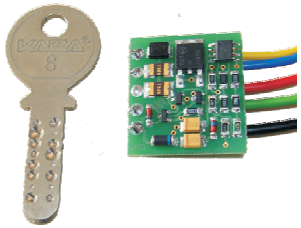

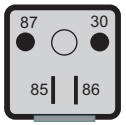

Relais

RBM+

IBS Dual Battery System set-up with RBM+

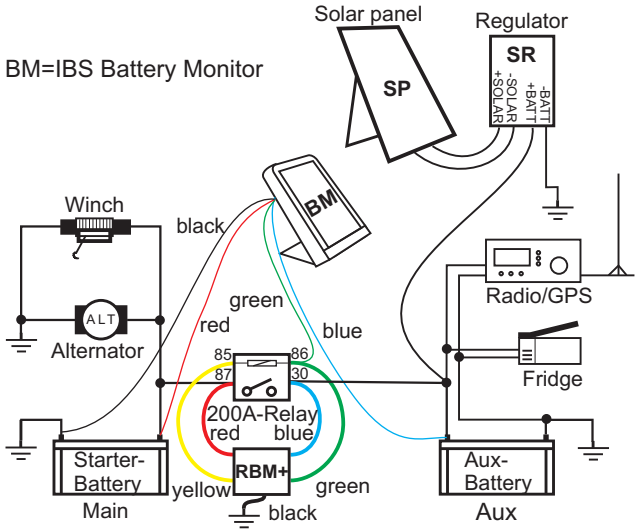

The 5 thick wires (red,black, yellow, green and blue) are from the additional RBM+ installation

Users Manual

Features

The **RBM+** is designed to improve the functionality of the IBS Dual Battery Systems (IBS-DBS and DBi-DBS) in case the starter battery is completely discharged or fails totally. The RBM+ offers an extended temperature range for very hot climate.

In case of a low or defective starter battery (engine start is not possible anymore), hit the “Link” button on the Battery Monitor (IBS-DBS/BM3 or DBi-DBS). The RBM+ is self activating if starter battery voltage is below 10V (starter battery has failed) and powers the IBS relay.

In very cold weather or when capacity of battery “Starter” is low the RBM+ supports the relay to make sure the contacts stay properly closed during emergency link start.

The DBS with RBM+ only performs if at least one battery has enough starting capacity.

RBM+ works with all IBS systems, best performance is achieved with new generation of IBS-DBS (µC-mark on unit) which works down to 3.3V due to the new micro-controller technology.

New IBS Battery Monitors (BM with µC Technology) are equipped with a low battery alarm on both batteries. If this alarm starts, check your battery system and repair before further traveling. If doing so the risk to have battery problems is very small and RBM+ is only there if things go totally wrong.

For best performance follow next steps:

- use 25 or 35mm2 wiring between relay and batteries
- The RBM+ should be placed within its wiring range
- RBM+ supports all IBS Systems what are equipped with the IBS 200A relay, relay with lower ratings might get destroyed during a link start. The IBS 200A relay are available as spare part/upgrade.

Installation Instructions

If RBM+ is installed in a IBS Dual Battery System follow the instruction of this RBM+ manual. The red relay bridge from relay terminal 85 to 87 is not required anymore.

The RBM+ is correctly installed if the manual and automatic link functions are operational.

The kit includes a 2:1 splitter what is used to split the green relay control wire from the battery monitor to the terminal 86 on relay and to the RBM+ module . 4 wires from RBM+ are connected directly on to terminals of the IBS relay, black wire makes connection to GND/Chassis.

IBS Intelligent Battery System
the ultimate Battery System

IBS GmbH
Seestrasse 24
3600 Thun / Switzerland
Phone: +41 (0)33 221 06 16
www.ibs-tech.ch
info@ibs-tech.ch

MADE IN SWITZERLAND

Distributor:

RBM+_12V_e_4 / 10.10.18

Applications

IBS Products

In vehicle applications the installation of a IBS Dual Battery System is recommended. Start priority is maintained and if excess charge from the auxiliary battery is available also the starter battery is automatically charged. A manual link function allows to start with the support of Auxiliary battery in emergency situation.

For mobile AC power the IBS Ultra Sine Inverter (150/400/800/1600W) offer highest reliability even if things are going very rough.

For mobile power the IBS portable solarkit SK80/SK120 offers high solar power up to 4.7/6A. The cells can be directed into the sun while the car is placed in the shade. The regulator is integrated into the solar kit and offers highest flexibility. With the optional battery terminal clip adapter the solar kit easily can be moved from car to car or to other battery application.

Warranty:
This warranty shall not apply to any product which has been subject to any misuse, negligence and accident or has been used (or opened, broken seal) for any other purpose than was designed.

5 year: Installation done by an IBS approved auto electrician
2 year: Other installations

Specifications

Supply Voltage	3-16V
System Voltage	12V
Max coil current	1A (protected)
RBM+ current consumption	<1mA
Technology	Darlington Power
Temperature range	-45°..+125° C
Sealing	IP67
Casing	ABS
Dimensions	30x30x30 [mm]
Weight	20g

Wires:

red:	Relay terminal 87
black:	Battery Minus or chassis
green:	Relay terminal 86
blue:	Relay terminal 30
Yellow:	Relay terminal 85

Protection Circuits:

- wrong polarity
- overload, short circuit
- reverse feeding
- surge and spike pulses

No liability for damages as a result of misuse, negligence, accident or wrong installation will be accepted from IBS!

CE

RoHS OK